www.snail-audio.com

User's Manual

SNAIL POWER

SNAIL POWER

Enjoy Snail Sound,Touch Your Soul!

MODEL: X6/X8

2026-01 B版

From Italy Snail Power

Warranty Policy and Customer Service Information

Thank you for purchasing SNAIL POWER products. If there is a product quality problem within 12 months from the date of purchase, you can enjoy the company's warranty service.

NOTES:

1. A valid proof of purchase must be issued by the seller when purchasing.
2. The warranty card and proof of purchase should be properly kept by the user and cannot be lost, no repeat issuing if lost.
3. if the product appear for the causes of failure, the user can use the warranty card and purchase certificate

Non-warranty Situation:

During the user's operation, those that meet one of the following conditions are not covered by the warranty.

1. The warranty period is exceeded.
2. Damage caused by failure to use in accordance with the requirements in the user's instruction manual.
3. Damage caused by human factors.
4. Failures caused by unauthorized disassembling, repair, and modification of products.
5. Damage caused by force majeure factors (such as floods, earthquakes, lightning, etc.).
6. No warranty card, invoice or warranty card does not match the invoice information.
7. The product wears out naturally.
8. Failure and damage caused by other non-product quality problems.

1: Technical Parameters

X6 Specifications

Driver	1*5.75" Cerametallic Woofer + 1*1" Titanium dome compression driver mated to 65°Hx 50°V Horn,Asymmetric directional projection.
Frequency Response	60Hz~20KHz (+/- 3dB)
Power Handing(Cont/Peak)	100W/ 400W
Sensitivity	90dB/W/m 2 frquency division
Avg. Max Output @1m	114dB
Impedance	8 Ohms
Enclosure Type	Patent bass enhancement technology,horn compression technology
Dimensions	Ø11"(280mm)*5.2"(132mm)H
Hole Dimensions	Ø9.9"(252mm)
Mounting Depth	5"(127mm)
Net weight	8.8 lbs. (4kg)
Finish	Aluminum panel+White paintable grill

X8 Specifications

Driver	1*8" Cerametallic Woofer + 1*1" Titanium dome compression driver mated to 110°Hx 90°V Tractrix Horn
Frequency Response	40Hz~20KHz (+/- 3dB)
Power Handing(Cont/Peak)	150W/ 600W
Sensitivity	91dB/W/m 2 frquency division
Avg. Max Output @1m	116dB
Impedance	8 Ohms
Enclosure Type	Patent inverted box bass, horn compression technology
Dimensions	20.7" (526mm)H*11.4" (290mm)W*0.4" (103mm)D
Hole Dimensions	19.49" (495mm)H*10.2" (259mm)W
Mounting Depth	3.9" (98mm)
Net Weight	18.7 lbs. (8.5kg)
Finish	Aluminum panel+White paintable grill

2：Finished product dimension drawing

X6 Finished product dimensions

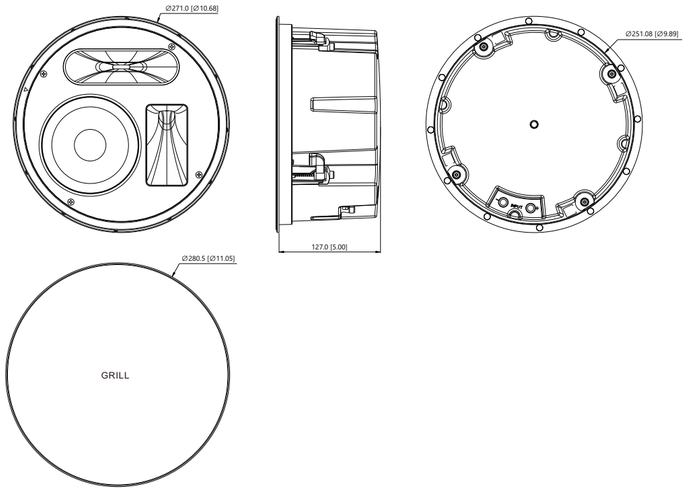

X8 Finished product dimensions

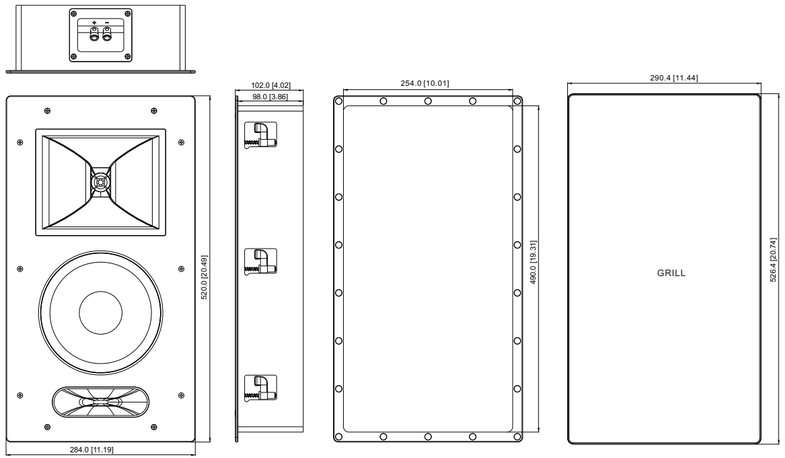

3：Speaker placement suggestions

X6 Placement Recommendations:
The main speakers are recommended to be installed at least 1 meter (3 feet) away from the wall.
The surround speakers are suggested to be mounted at a 20-degree angle relative to the audience/viewers.

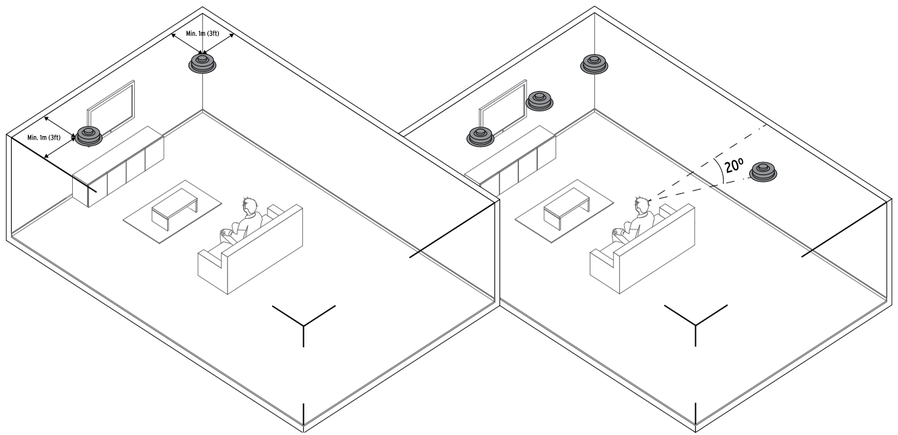

X8 Placement Recommendations:
The main speakers are recommended to be installed at least 1 meter (3 feet) away from the wall and at least 2 meters (6 feet) away from the audience/viewers.
The surround speakers are suggested to be mounted 2 meters (6 feet) above the ground and at a 20-degree angle relative to the audience/viewers.

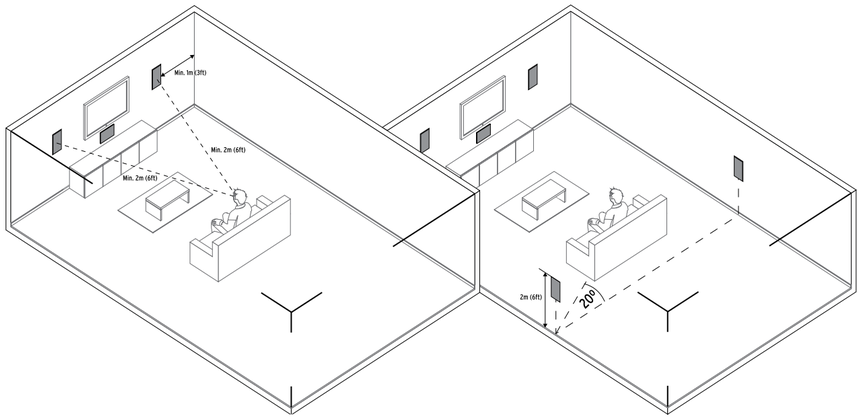

4：Speaker Installation Instructions

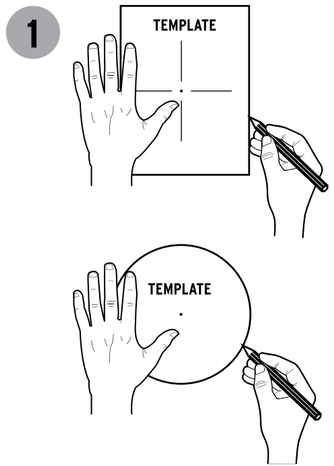

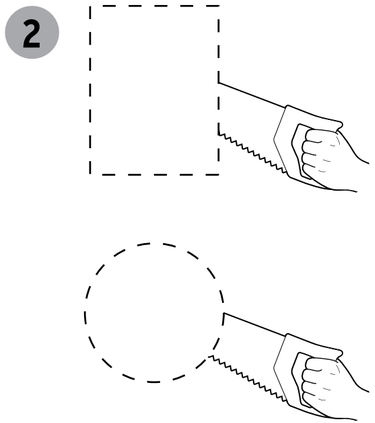

① Mark the hole positions on the locations where the speakers need to be installed.

② Use a hole saw to drill the holes.

③ After drilling the holes, thread the speaker wires through the holes and connect them to the speakers (pay attention to the positive and negative poles).

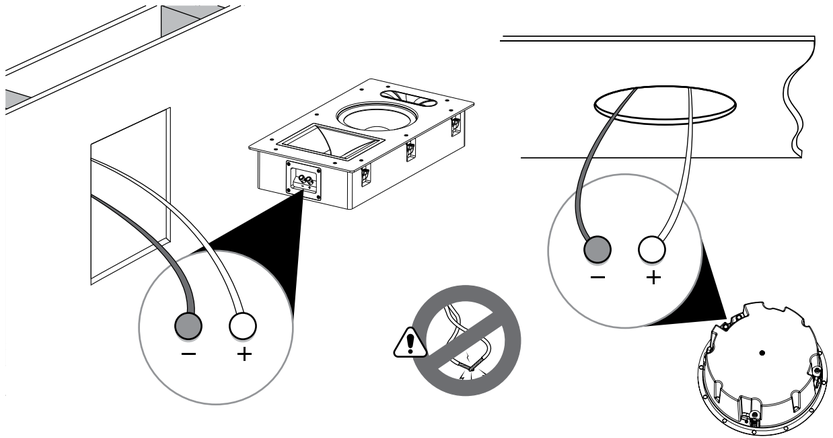

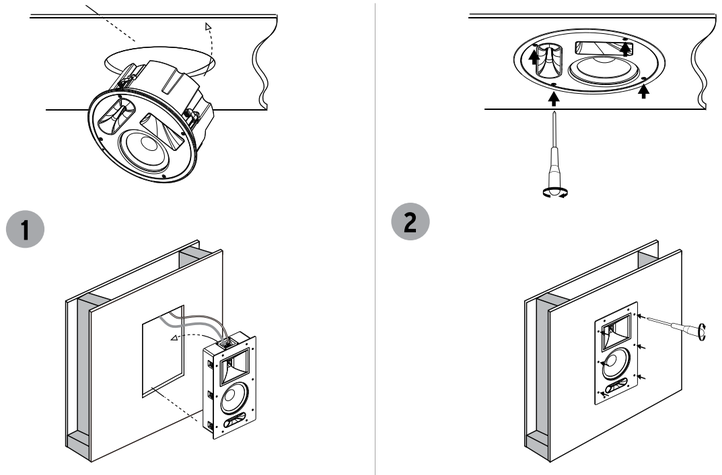

④ After connecting the speaker wires, place the speaker into the hole, and use a screwdriver to tighten the screws on the speaker panel in a clockwise direction.

5 After installing the speaker, directly cover the steel mesh on the panel (the speaker has a built-in magnet for attachment).

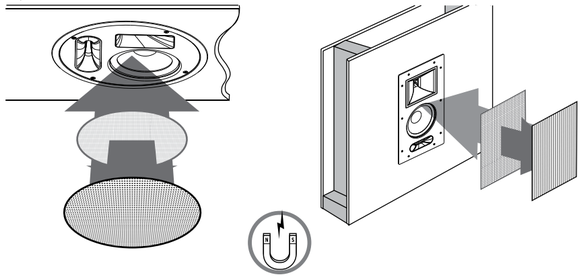

5: Maintenance and Cleaning

Clean the surface of the speaker directly with a clean cloth.Do not use liquids or cleaning agents for cleaning.

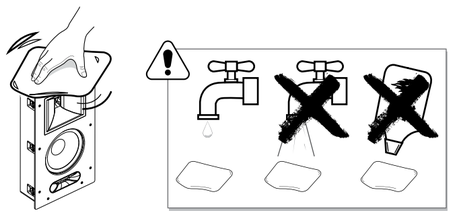

IMPORTANT SAFETY INFORMATION

CAUTION!
RISK OF ELECTRIC SHOCK
DO NOT OPEN

TO REDUCE THE RISK OF ELECTRIC SHOCK
DO NOT REMOVE COVER (OR BACK)
NO USER-REMOVEABLE PARTS INSIDE
REFER SERVICING TO QUALIFIED PERSONNEL

ADVERTISSEMENT: RISQUE DE CHOC ELECTRIQUE- NE PAS OUVRIR

This symbol indicates that there are important operating and maintenance instructions in the literature accompanying this unit.

This symbol indicates that dangerous voltage constituting a risk of electric shock is present within this unit.

Read these instructions.
Keep these instructions.
Heed all warnings.
Follow all instructions.
Do not use this apparatus near water.
Clean only with cloth.
Do not block any ventilation openings.
Install in accordance with the manufacturer's instructions.
Do not install near any heat sources such as radiators, heat registers, stoves, or other apparatus (including amplifiers) that produce heat.

Do not defeat the safety purpose of the polarised or grounding plug. A polarised plug has two blades with one wider than the other. A grounding plug has two blades and a third grounding prong. The wide blade or the third prong is provided for your safety. If the provided plug does not fit into you outlet, consult an electrician for replacement of the obsolete outlet.
Protect the power cord from being walked on or pinched particularly at plugs, convenience receptacles, and the point where they exit from the apparatus.
Only use attachments/accessories specified by the manufacturer.
Unplug the apparatus during lightning storms or when unused for long periods of time.
Refer all servicing to qualified personnel. Servicing is required when the apparatus has been damaged in any way, such as power supply cord or plug is damaged, liquid has been exposed to rain or moisture, does not operate normally, or has been dropped.
CAUTION: These servicing instructions are for use by qualified service personnel only. To reduce the risk of electric shock, do not perform any servicing other than that contained in the operating instructions unless you are qualified to do so.
No naked flame sources, such as lighted candles, should be placed on the apparatus.
WARNING: The mains plug/appliance coupler is used as disconnect device shall remain readily operable.

Correct disposal of this products. This marking indicates that this product should not be disposed with other household wastes throughout the EU. To prevent possible harm to the environment or humanhealth from uncontrolled waste disposal, recycle it responsibly to promote the sustainable reuse of material resources. To return your used device, please use the return and collection systems or contact the retailer where the product was purchased. They can take this product for environmentally safe recycling.

This equipment is a class II or double insulated electrical appliance. It has been designed in such a way that it does not require a safety connection to electrical earth.

ROHS hazardous substances management

Hazardous substance	Loudspeaker	Wire	Enclosure	Accessories	plastic
Pb	○	○	○	○	○
Hg	○	○	○	○	○
Cd	○	○	○	○	○
Cr,Vi	○	○	○	○	○
PBB	○	○	○	○	○
PBDE	○	○	○	○	○

Indicating that the content of the hazardous substances in all homogeneous materials of the components are under the limit requirements in GB/T26572011。

SERVICE CARD

I hope our sincerely services can accompany you life.

Your praise is our greatest power for making progress!

Genuine guarantee Invoice

After-sale service card

✓15days replacement 1.Commodity quality problem. 2.Logistics damage. 3.accessories are not missing.	✓12months warranty 1.Within the warranty period.

CAUTIONS

① The following conditions don't enjoy 7 days replacement service:
1.Product quality problems caused by man-made damage;

② 2.Vexatious request for replacement;
The following conditions don't enjoy 12 months warranty:
1.The warranty period has expired;
2.The quality of goods caused by man-made damage.

Warm tips:
1.We don't accept the freight collect and postage when you return the goods!
2.Please ensure that the product is intact when you return. If you are not satisfied with the gift, please return the gift with products together.

First of all, sincerely apologize to you for whatever reason to return, we are extremely sorry!

If you haves any questions,please communicate with us promptly, we will solve it for you as soon as possible!

Web:www.snailpower.net

After-sale service registration from

Customer information

Name: _____ Telephone: _____

E-mail: _____ Postal code: _____

Address: _____

Product information

Model: _____ Product barcode: _____

Finishing: _____ Serial number: _____

Order number: _____ Delivery number: _____

Dealer information

Dealer Name: _____ Telephone: _____

Address: _____

The reason for return: _____

Problem description: _____

Others: _____

Return requirements:

☐ Return ☐ Replacement

保修政策和客户服务信息

感谢您购买 SNAIL POWER 产品。如果自购买之日起12个月内出现产品质量问题，您可以享受公司的保修服务。

注意：

1.购买时卖方必须出具有效的购买证明。

2.保修卡和购买凭证由用户妥善保管，不得丢失，丢失后不得重复发放。

3.如果本产品出现非人为原因造成的故障，用户可使用保修卡和购买证书在保修期内到客户服务中心进行维修。

非保修情况：

在用户操作过程中，满足以下条件之一且不在保修范围内的设备。

1.超过保修期。

2.未按照用户使用说明书的要求使用而造成的损坏。

3.人为因素造成的损害。

4.未经授权的产品拆卸、维修和修改导致的故障。

5.不可抗力因素（如洪水、地震、雷电等）造成的损害

6.无保修卡、发票或保修卡与发票信息不匹配。

7.产品自然磨损。

8.其他非产品质量问题造成的故障和损坏。

一：技术参数

X6规格参数

驱动单元	1只5.75英寸金属陶瓷低音单元 + 1 只 1 英寸钛膜球顶压缩驱动单元（搭配 65° 水平 ×50° 垂直覆盖角的号角），非对称指向性投射
频率响应	60Hz~20KHz(+/-3dB)
功率处理（连续/峰值）	100W/400W
灵敏度	90dB/W/m　双分频
平均最大输出	114dB
阻抗	8Ω
箱体类型	专利低音增强技术、号角压缩技术
尺寸	Ø11英寸(280mm)*高5.2英寸(132mm)
开孔尺寸	Ø9.9英寸(252mm)
安装深度	5英寸(127mm)
净重	8.8磅（4kg）
表面处理	铝面板+白色可喷漆钢网

X8规格参数

驱动单元	1 只 8 英寸金属陶瓷低音扬声器 + 1 只 1 英寸钛膜压缩驱动器，搭配水平覆盖角 110°、垂直覆盖角 90° 的 Tractrix 号角
频率响应	40Hz~20KHz(+/-3dB)
功率处理（连续/峰值）	150W/600W
灵敏度	91dB/W/m　双分频
平均最大输出	116dB
阻抗	8Ω
箱体类型	专利倒相箱低音技术、号角压缩技术
尺寸	高20.7英寸(526mm)*宽11.4英寸(290mm)*深0.4英寸（103mm）
开孔尺寸	高19.49英寸(495mm)*宽10.2英寸（259mm）
安装深度	3.9英寸(98mm)
净重	18.7磅（8.5kg）
表面处理	铝面板+白色可喷漆钢网

X6/X8

二：成品尺寸图

X6成品尺寸

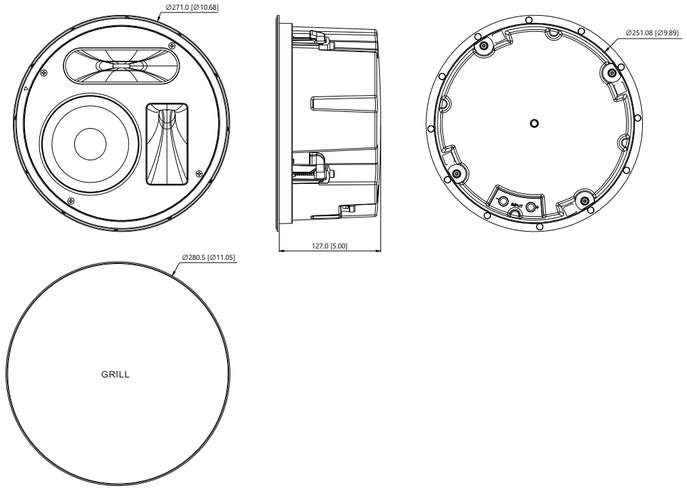

X8成品尺寸

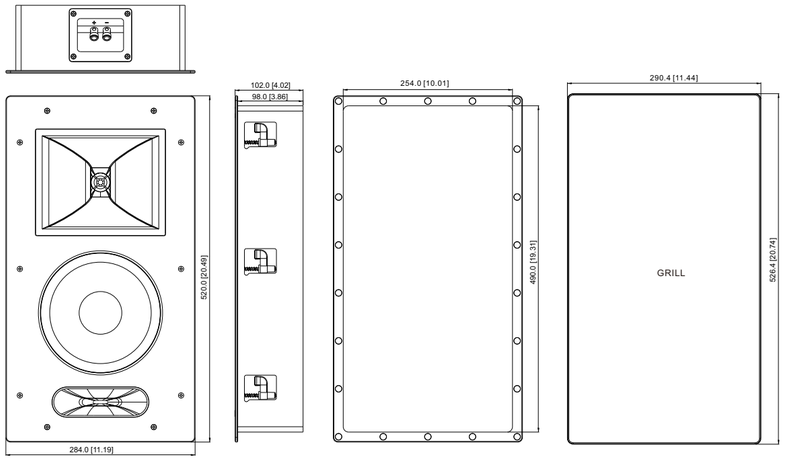

三：音箱布置建议

X6布置建议：主扩喇叭安装建议离墙至少1米（3英尺）以上，环绕喇叭建议相对于视听者呈20度夹角安装

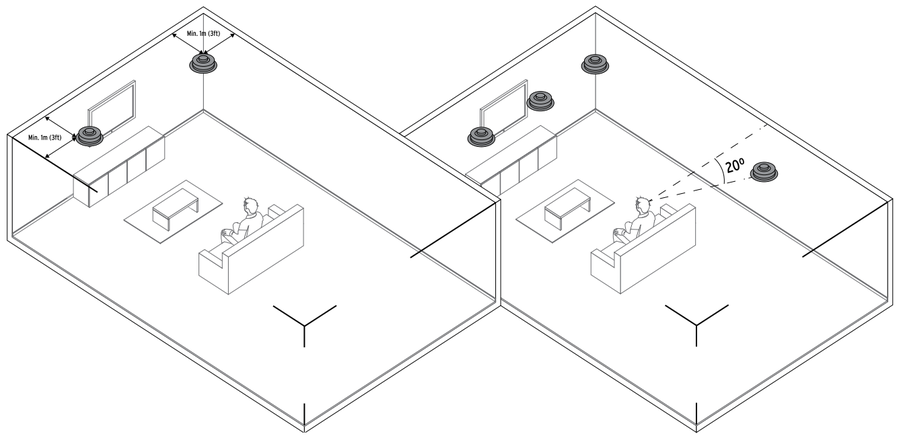

X8布置建议：主扩喇叭安装建议离墙至少1米（3英尺）以上，离视听者至少2米（6英尺）以上，环绕喇叭建议离地2米（6英尺）并且相对于视听者呈20度夹角安装

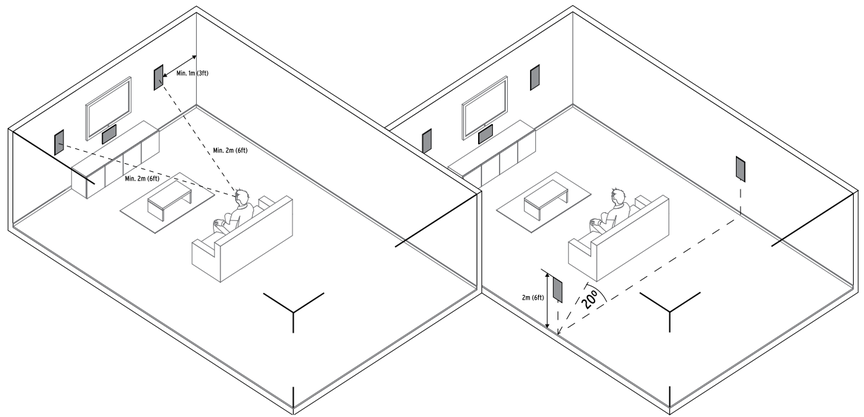

四：音箱安装说明

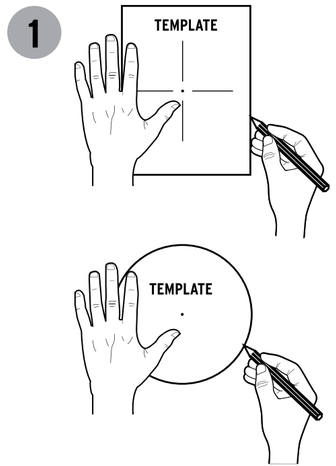

① 在需要安装音箱的位置画出孔位

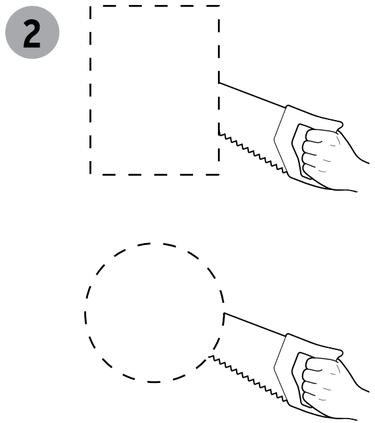

② 使用开孔器开孔

③ 开孔后将音箱线从孔内穿出与音箱连接（注意正负极）

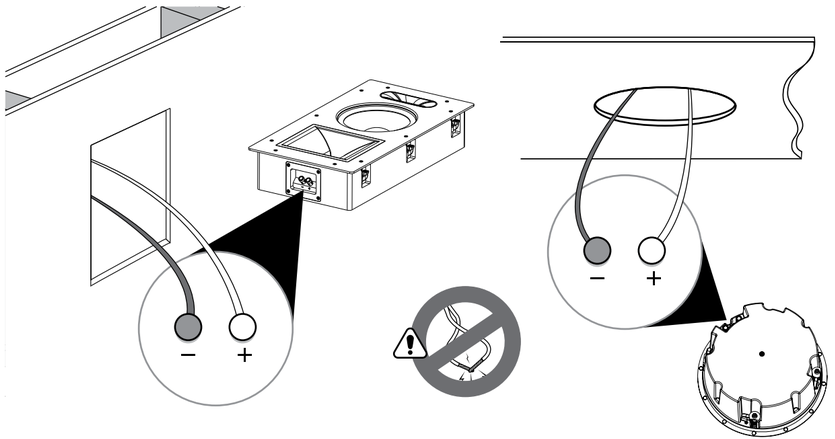

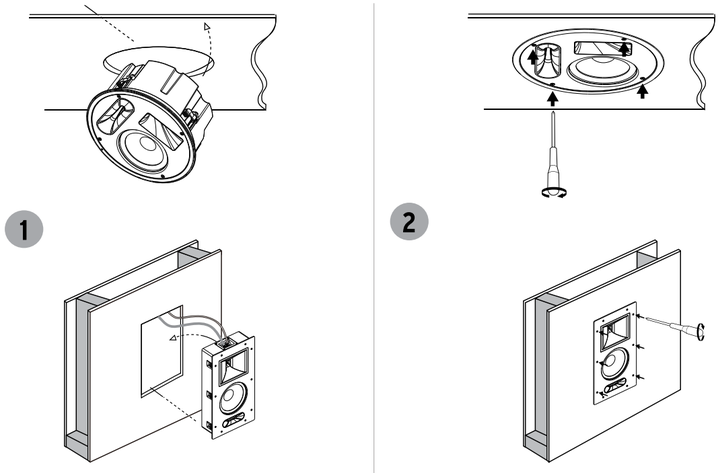

④ 连接好音箱线后将音箱放入孔内，使用螺丝刀沿顺时针方向拧紧音箱面板上的螺丝

⑤ 安装好音箱后将钢网直接盖在面板上（音箱自带磁吸）

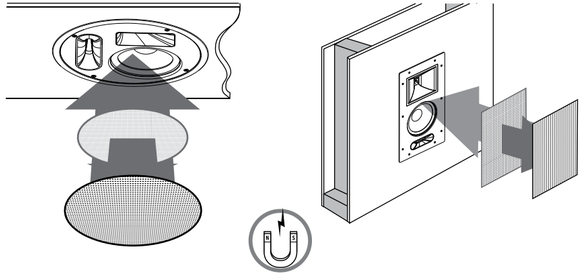

五：保养与清洁

直接使用洁净的布料清洁音箱表面，
请勿使用液体及清洁剂清洁

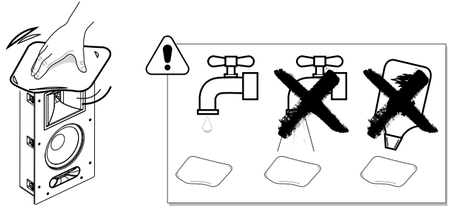

重要的安全提示

为减少触电的风险，请勿私自拆开面板，机身内部无任何用户可自行更换的零部件，如果出现异常，请咨询专业人员。

此标志表示包装盒内附带有重要的操作指引和维修说明书。

此标志表示机身存在的高电压有可能引起触电风险。

请阅读此说明书。

请保留此说明书。

请留意所有的警告标示。

请遵循所有的操作说明。

请勿将本产品靠近水源。

仅能使用干布清洁机身。

请勿阻塞各通风口。

请按生产商的说明书进行安装操作。

请勿靠近任何热源进行安装，比如散热器、热调温器、火炉及其他散热设备（包括功放）。

请勿损坏带极性插头或接地型插头的安全性能。带极性插头一般有两个宽度不一的插片而接地型插头除这两个插片外还带一个接地插片，其中稍宽点的插片及接地插片是为了保障用户安全而提供。如果产品上的插头与用户插座不匹配，请咨询相关专业人士更换合适的插座。

保护好电源线，避免被踩踏或碾压，尤其是插头、便捷式插座及设备输出端口处。

仅使用厂商所指定的附件或零件。

雷电天气或长时间不使用该产品时，请将电源插头拔出。

所有的维修服务，请咨询专业的维修人员。当产品出现以下任何形式的损坏时可以要求维修，比如电源线或插头损坏、液体溅入或设备内掉入异物、产品淋雨受潮、非正常操作或产品被摔落等情况。

警告：为减少火灾及电击的危险，请勿将产品淋雨受潮。产品不能够被溅湿，请勿将任何装有液体的容器如花瓶放在本产品上方。

请勿将任何明火放置于产品上面，如蜡烛。

警告：电源插头被作为本产品的断电装置，请保持插头能进行方便操作。

该标志表明本产品报废后应进行合理的处置且不能与生活垃圾一同处理。为了防止对环境及人体健康可能造成的危害，可对该产品进行合理回收以促进材料的可持续使用。如果要退回该产品，应通过正规的回收渠道进行回收或联系此产品的经销商，他们可对其进行无公害的安全回收。

该产品已符合II类设备的安全要求，电源连接时不需要接地。

ROHS有害物质管理

有毒&有害物质	喇　叭	电　线	箱　体	附　件	塑　胶
铅(Pb)	○	○	○	○	○
汞(Hg)	○	○	○	○	○
镉(Cd)	○	○	○	○	○
六价铬(Cr,Vi)	○	○	○	○	○
多溴联苯(PBB)	○	○	○	○	○
多溴联苯醚(PBDE)	○	○	○	○	○

表示该有毒有害物质在该部件所有均质材料中的含量均在GB/T26572011规定的限量要求以下。

SERVICE CARD

售后服务保障卡

希望我们的真诚服务 能够陪伴你一生
您的好评是我们进步的最大动力！

正品保障　提供发票

X6/X8

售后服务

✓ 7天包换

1.商品质量问题!
2.物流造成商品损坏!
3.配件完整无缺!

✓12个月保修

1.确定在保修时效之内!

注意事项

①以下情况,不享受7天包换服务:
1.人为因素造成产品质量问题!
2.本人主观因素,无理取闹要求换货者!

②以下情况,不享受12个月保修服务:
1.保修服务时效过期!
2.人为损坏造成商品质量问题!

温馨提示:
1.退换货快递不接受到付件及平邮!
2.办理退货,请确保产品完好,如不满足满赠要求,请将赠品一并退回

首先真诚的向您道歉,无论任何原因让您需要退换货,我们都致以万分歉意!
如果您有任何问题,请及时与我们沟通,我们都尽快为您解决!
官网：www.snailpower.net

售后服务登记表

用户信息
姓　名: ________　联系电话: ________
电子邮件: ________　邮政编码: ________
家庭地址: ________

产品信息
机种型号: ________　产品条码: ________
表面处理: ________　序 列 号: ________
订购单号: ________　发货单号: ________

经销商信息
销售商名称: ________　联系电话: ________
地 址: ________

退换原因: ________
问题说明: ________
其他说明: ________
退换要求: ☐ 退货　☐ 换货